C.I.P.	300 Win. Mag.	TAB.	III
		Date	84-06-14
	Country of Origin: US	Revision	02-05-15

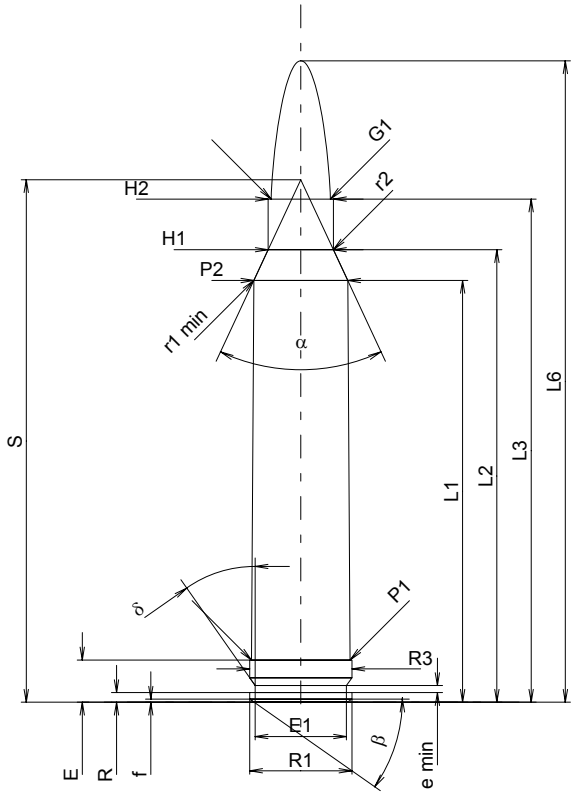

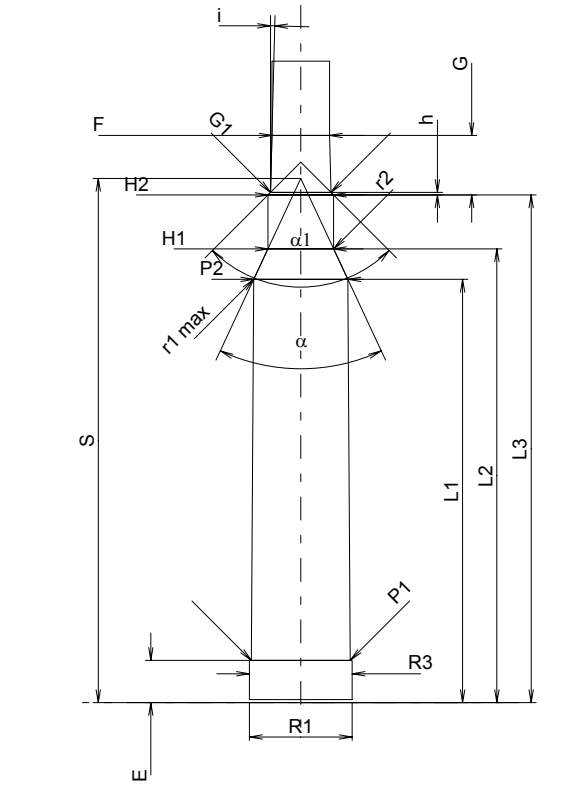

Scale 1:1

CARTRIDGE MAXI

Lengths

L1	=	55.78	
L2	=	59.85	
L3 1)	=	66.55	
L4	=		
L5	=		
L6	=	84.84	

Case Head

R	=	1.27	
R1	=	13.51	
R3	=	13.51	
E 1)	=	5.59	-0.20
E1	=	12.07	
e min	=	0.94	
δ	=	35°	
f	=	0.41	
β	=	35°	

Powder Chamber

P1	=	13.03
P2 *	=	12.42

Junction Cone

α *	=	50°
S *	=	69.10
r1 min	=	1.02
r2	=	2.54

Collar

H1 *	=	8.63
H2 1)	=	8.63

Projectile

G1 1)	=	7.85
G2	=	
F	=	
L3+G 1)	=	74.41

Pressures (Energies)
Method Transducer

Pmax	=	4300	bar
PK	=	4945	bar
PE	=	5375	bar
M	=	25.00	
EE	=	4935	Joule

Miscellaneous Dimensions

Fe 1)	=	0.10
delta L	=	

CHAMBER MINI

Lengths

L1	=	55.98
L2	=	60.01
L3 1)	=	67.16

Breech

R	=	1.27
R1	=	13.59
R2	=	
R3	=	13.59
r	=	

Powder Chamber

E 1)	=	5.59
P1 1)	=	13.06
P2 *	=	12.45

Junction Cone

α *	=	50°
S *	=	69.33
r1 max	=	0.76
r2	=	3.18

Collar

H1 *	=	8.69
H2 1)	=	8.65

Commencement of Rifling

G1 1)*	=	8.00
G 1)	=	7.86
α1 *	=	90°
h	=	0.33
s	=	
i 1)*	=	1°26'37"
w	=	

Barrel

F 1)*	=	7.62
Z 1)	=	7.82

Grooves

b	=	2.79	
N	=	6	
u	=	254.00	
Q	=	47.32	mm²

Dimensions in << mm >>
Dimensions and Tolerances for Proof Barrels
see Appendix CR 1.

Notes: 1) Check for safety reasons
* Basic dimensions